Glass Fuse Link

A Fuse link is a replacement part of the assembly, it is usually to be replaced on circuit interruption to restore the fuse to the operation conditions. The fuse clement is made of tinned copper wire which has different current ratings such as 25A, 35A, 50A.etc. The metal contacts are made of tinned copper with thickness of 1mm. The fuse holder is made of high borosilicate glass which has very strong heat resistance, able to maintain stability under extremely cold and hot temperature changes.

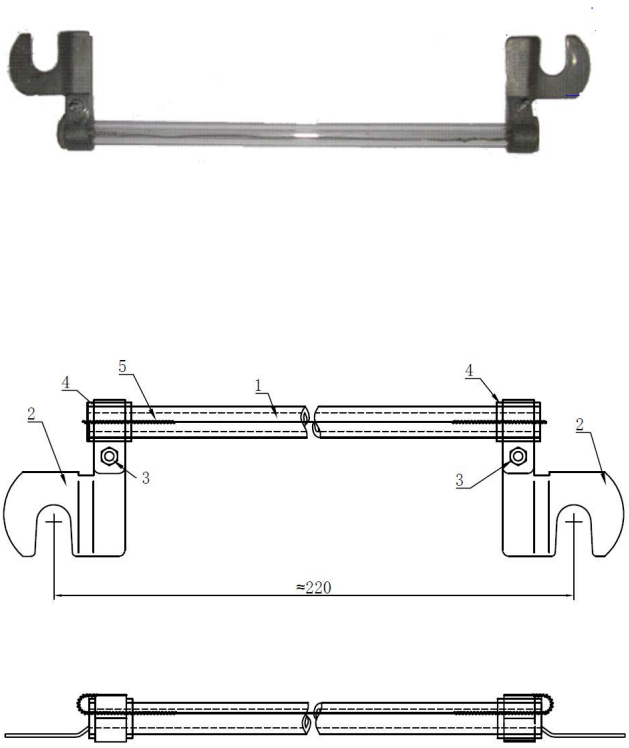

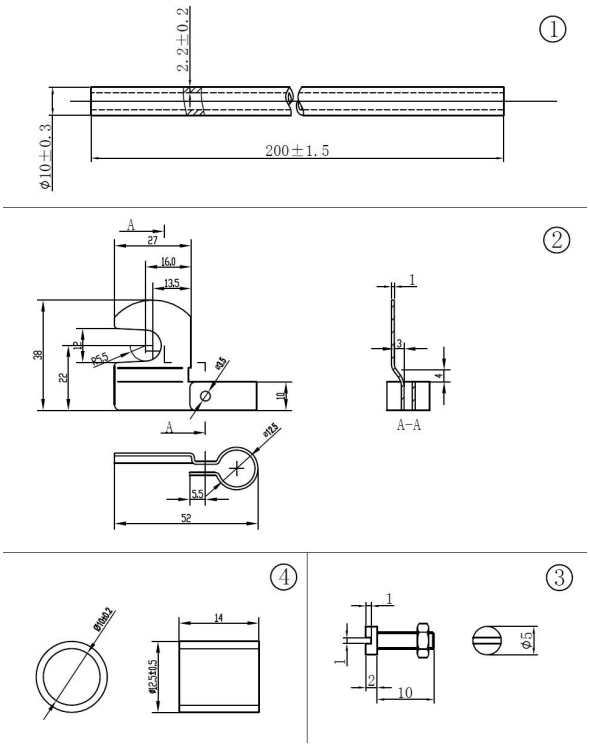

Type	Product Length (mm)	Metal Contacts Materials	Fuse Element Dia.(mm) (for reference only)	Pack/CTN (PCS)
ZENEN 10A	220	Tinned Copper 1mm thick	0.34	50
ZENEN 20A	220	Tinned Copper 1mm thick	0.53	50
ZENEN 25A	220	Tinned Copper 1mm thick	0.58	50
ZENEN 35A	220	Tinned Copper 1mm thick	0.75	50
ZENEN 50A	220	Tinned Copper 1mm thick	0.95	50
ZENEN 60A	220	Tinned Copper 1mm thick	1.10	50